# SINGLE DUCT DIGITAL CONTROLS

# Control Sequence Number W12173

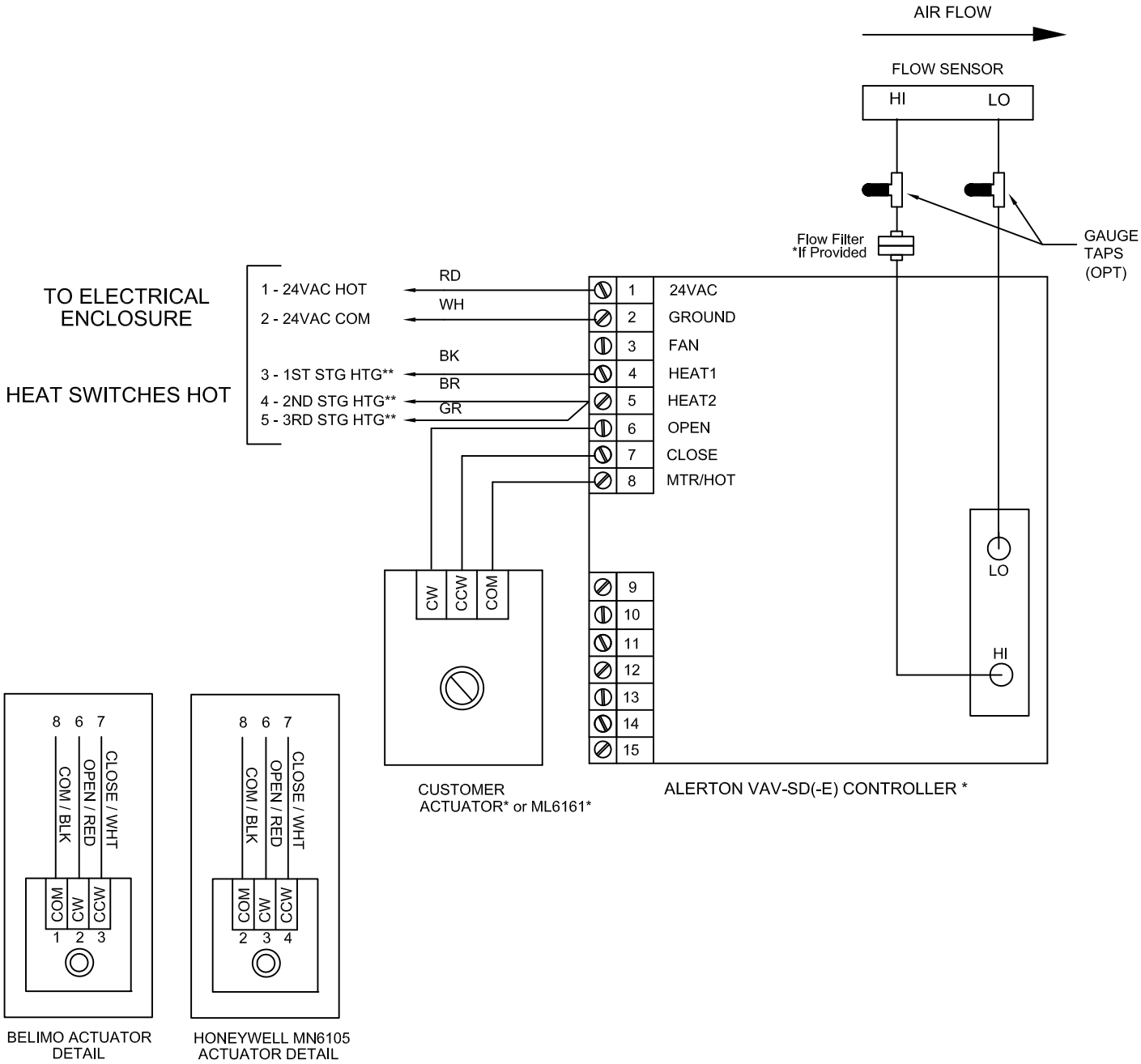


NOTE

* INDICATES SUPPLIED BY CONTROL CONTRACTOR
**WIRE STAGES OF HEAT/POWER AS REQUIRED BY ORDER

——— FACTORY WIRING
—— - - —— OPTIONAL WIRING
– – – – – – FIELD WIRING

| | | | |
|---|---|---|---|
| **PROJECT:** | | | **SINGLE DUCT**<br>**ALERTON VAV-SD**<br>COOLING,<br>UP TO 2 STG ELEC REHEAT<br>VARIABLE OR CONSTANT VOLUME |
| **ENGINEER:** | | | |
| **CUSTOMER:** | | 12173 | |
| **SUBMITTAL DATE:** | **SPEC. SYMBOL:** | 2015/09/30 | |

©

REV H Printed in Canada