FAN POWERED DIGITAL CONTROLS

Control Sequence Number W16202

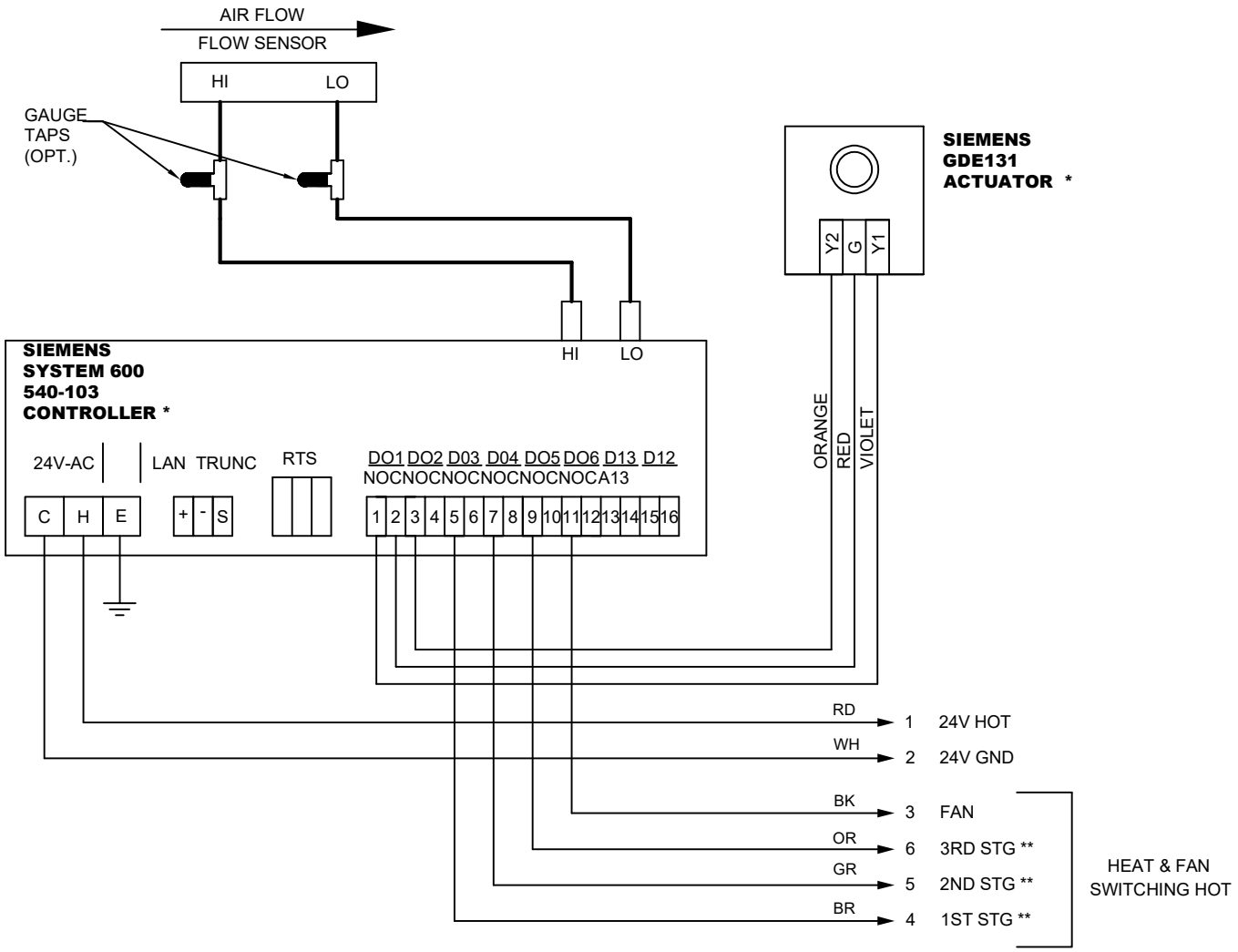

NOTE :

* INDICATES COMPONENTS SUPPLIED BY CONTROL CONTRACTOR.
** WIRE STAGES OF HEAT AS REQUIRED BY ORDER

LEGEND

FACTORY FLOW SENSOR TUBING

FACTORY ELECTRICAL WIRING

PROJECT:		
ENGINEER:		
CUSTOMER:		W16202
SUBMITTAL DATE:	**SPEC. SYMBOL:**	2018/05/08

FAN POWERED
SIEMENS 540-103
COOLING,
OPT. HW REHEAT or
UP TO 3 STG ELEC REHEAT
VARIABLE /CONSTANT VOLUME

©

REV A

Printed in Canada